

PRODUCT UPDATE

LEMO USA, Inc.
635 Park Court
P.O. Box 2408
Rohnert Park, CA 94927-2408

Main (707) 578-8811
Toll Free (800) 444-5366
Fax (707) 578-0869
Email info@lemousa.com

Number: #127J
By: Applications Engineering Dept.
Date: November 14, 2013

Revised LEMO Elbow Plugs (00, B, S, K & E)
FHG.0K.3##.xxxxxx changes to FPG.0K.3##.xxxxxx
(This change includes all keyways)



LEGACY **NEW**

Summary of Changes:

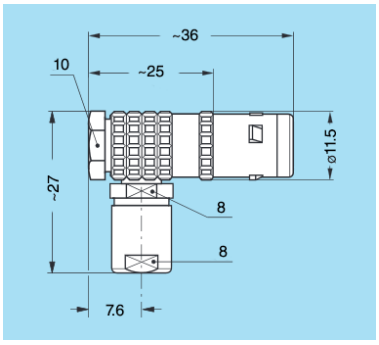	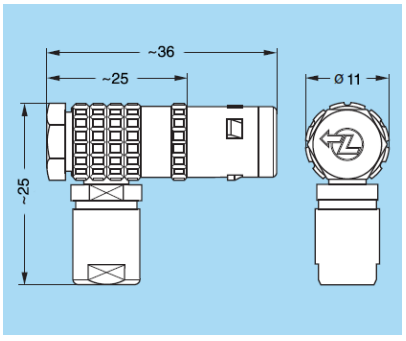
Legacy FHG.0K.3##.xxxxxx	New FPG.0K.3##.xxxxxx

- New collet carrier design
- Anti-rotation collet design
- Same receptacle compatibility as FHG.0K.3##.xxxxxx

Note: Assembly instruction processes to follow and will be sent separately!

Effective Date:

The NEW design will be available as a replacement in early 2014. The legacy design will be available at the current pricing for purchase orders placed by December 13th, 2013, with delivery up to June 6, 2014.

The legacy design may be discontinued as inventory is depleted. Some legacy versions may still be available but at a price increase. Please discuss a last time buy, pricing and availability with your Customer Account Specialist.

If you have any questions or concerns regarding this change, please contact your Customer Account Specialist or Applications Engineering at 1-800-444-5366 / email: info@lemousa.com

Note: Marcom will contact each rep firm and distributor with their specific customer order history so that each rep firm and distributor can notify the customer directly based on parts ordered previously.

Thank you for your continued support of LEMO products!